COMMUNICATIONS

ALLIANCE LTD

AUSTRALIAN STANDARD

AS/ACIF S041.1:2009

Requirements for DSL Customer Equipment for connection to the Public Switched Telephone Network – Part 1: General

Adopted for regulatory purposes

Australian Standard – *Requirements for DSL Customer Equipment for connection to the Public Switched Telephone Network – Part 1: General*

This Standard is issued in draft form for public comment as DR AS/ACIF S041.1:2008.

First published as AS/ACIF S041:2005
Second edition as AS/ACIF S041.1:2009

ISBN: 1 74000 385 3

Communications Alliance Ltd was formed in 2006 to provide a unified voice for the Australian communications industry and to lead it into the next generation of converging networks, technologies and services. ACIF is a division of Communications Alliance.

Disclaimers

1. Notwithstanding anything contained in this Standard:

   (a) Communications Alliance disclaims responsibility (including where Communications Alliance or any of its officers, employees, agents or contractors has been negligent) for any direct or indirect loss, damage, claim, or liability any person may incur as a result of any:

      (i) reliance on or compliance with this Standard;

      (ii) inaccuracy or inappropriateness of this Standard; or

      (iii) inconsistency of this Standard with any law; and

   (b) Communications Alliance disclaims responsibility (including where Communications Alliance or any of its officers, employees, agents or contractors has been negligent) for ensuring compliance by any person with this Standard.

2. The above disclaimers will not apply to the extent they are inconsistent with any relevant legislation.

Copyright

© Commonwealth of Australia 2009

This work is copyright. Apart from any use as permitted under the Copyright Act 1968, no part may be reproduced by any process without prior written permission from the Commonwealth available from AusInfo. Requests and inquiries concerning reproduction and rights should be addressed to the Manager, Legislative Services, AusInfo, GPO Box 1920, Canberra ACT 2601 or by email to cwealthcopyright@dofa.gov.au.

FOREWORD

General

This Standard was prepared by Communications Alliance and most recently revised by the WC12 : *ADSL Filter/Splitter Revision* Working Committee. It is one of a series of Telecommunication Standards developed under the Memorandum of Understanding between the Australian Communications Authority (ACA) and the Australian Communications Industry Forum.

Note: On 1 July 2005 the ACA became the Australian Communications and Media Authority (ACMA) and the Memorandum of Understanding continues in effect as if the reference to the ACA were a reference to ACMA.

This Standard is a revision of AS/ACIF S041:2005 *Requirements for DSL Customer Equipment for connection to the Public Switched Telephone Network*. It is the result of a consensus among representatives on the Communications Alliance Working Committee to produce it as an Australian Standard.

The requirements in this Standard are consistent with the aims of s376 of the *Telecommunications Act 1997*. Specifically these aims are—

(a) protecting the integrity of a telecommunications network or facility;

(b) protecting the health and safety of persons;

(c) ensuring access to emergency services; and

(d) ensuring interoperability with a standard telephone service.

It should be noted that some Customer Equipment (CE) may also need to comply with requirements in other Standards or other Parts of this Standard.

AS/ACIF S041 consists of the following parts under the general title *Requirements for DSL Customer Equipment for connection to the Public Switched Telephone Network*:

- *Part 1: General*
- *Part 2: Modems for use in connection with all DSL services*
- *Part 3: Filters for use in connection with all ADSL services*

Applicable electrical safety Standards and EMC Standards may apply under Commonwealth or State laws, or both.

Intellectual property rights

Equipment which is manufactured to comply with this Standard may require the use of technology which is protected by patent rights in Australia. Questions about the availability of such technology, under licence or otherwise, should be directed to the patent holder or Australian licensee (if known) or through enquiry at IP Australia which incorporates the Patent, Designs and Trade Marks and Offices. Further information can be found at www.ipaustralia.gov.au.

Standards revision

Australian Standards (AS/ACIF Standards) developed by the Australian Communications Industry Forum, a division of Communications Alliance, are

updated according to the needs of the industry, by amendments or revision. Users of AS/ACIF Standards should make sure that they possess the latest amendments or editions. Representations concerning the need for a change to this AS/ACIF Standard should be addressed to:

The Project Manager
Customer Equipment and Cable Reference Panel
Communications Alliance
PO Box 444
Milsons Point NSW 1565

Regulatory notice

This document has been made by ACMA as Telecommunications Technical Standard AS/ACIF S041.1–2009 under s376 of the *Telecommunications Act 1997*.

ACMA is a Commonwealth authority with statutory powers to impose requirements concerning telecommunications Customer Equipment and Customer Cabling.

ACMA requires Australian manufacturers and importers, or their Australian agents, of specified items of Customer Equipment and Customer Cabling to establish compliance with Standards such as this. Items are required to be labelled in accordance with the applicable labelling notices.

Details on current compliance arrangements can be obtained from the ACMA website at http://www.acma.gov.au or by contacting ACMA below at:

Australian Communications and Media Authority
PO Box 13112
Law Courts PO
Melbourne VIC 8010
Australia

Telephone: +61 3 9963 6800
Facsimile: +61 3 9963 6899
TTY: +61 3 9963 6948

Introduction

This introduction for the AS/ACIF S041.1 ***Requirements for DSL Customer Equipment for connection to the Public Switched Telephone Network – Part 1: General*** Standard is not an authoritative section of this Standard and is only provided as guidance for the user of the Standard to outline its objectives, the factors that have been taken into account in its development and to list the principle differences between the new and the previous edition.

The reader is directed to the clauses of this Standard for the specific requirements and to the Australian Communications and Media Authority (ACMA) for the applicable telecommunications labelling and compliance arrangements.

Note: Further information on the telecommunications labelling and compliance arrangements can be found in *The Telecommunications Labelling (Customer Equipment and Customer Cabling) Notice* (the TLN). The TLN can be obtained from the Australian Communications and Media Authority (ACMA) website at www.acma.gov.au.

The objective of this Standard is to provide the technical requirements and test methods for Customer Equipment (CE), or the parts of CE that are designed or intended for connection to a DSL service that shares the metallic local loop with an analogue PSTN two-wire service in order to meet the regulatory arrangements for such equipment in Australia.

The objective of this revision is to include requirements currently specified in the Telstra RCIT.0004 ADSL Splitter Specification to bring the Standard in line with the ADSL services being offered by Australian broadband service providers and to restructure the Standard as a multi-part Standard to streamline the compliance testing separately of DSL modems and ADSL splitters/filters.

The principal differences between this edition of AS/ACIF S041.1 and the previous edition of AS/ACIF S041 include:

(i) only requirements common to all customer equipment within the scope of this Standard are specified.

TABLE OF CONTENTS

1	**INTERPRETATIVE GUIDELINES**		**1**
	1.1	**Categories of requirements**	**1**
	1.2	**Compliance statements**	**1**
	1.3	**Definitions, expressions and terms**	**1**
	1.4	**Notes**	**1**
	1.5	**References**	**1**
	1.6	**Units and symbols**	**1**
2	**SCOPE**		**2**
3	**REFERENCES**		**3**
4	**ABBREVIATIONS AND DEFINITIONS**		**4**
	4.1	**Abbreviations**	**4**
	4.2	**Definitions**	**4**
	4.2.1	*Carrier*	*4*
	4.2.2	*Customer Equipment*	*4*
	4.2.3	*Facility*	*4*
	4.2.4	*Public Switched Telephone Network (PSTN)*	*4*
	4.2.5	*Ring-in/Loop-out PSTN line*	*4*
	4.2.6	*Metallic local loop*	*4*
	4.2.7	*Standard Telephone Service*	*5*
	4.2.8	*Telecommunications Network*	*5*
	4.2.9	*Voice Frequency (VF)*	*5*
5	**REQUIREMENTS**		**6**
	5.1	**General**	**6**
	5.1.1	*Line polarity*	*6*
	5.1.2	*Transmitted voltages*	*6*
	5.1.3	*Insulation Resistance*	*6*
	5.1.4	*Ringing Impedance*	*6*
	5.1.5	*DC during Ring*	*6*
6	**TESTING**		**8**
	6.1	**Verification of compliance with requirements**	**8**
	6.2	**Standard test conditions**	**8**
	6.3	**Levels**	**8**
	6.4	**Test frequencies**	**9**
	6.5	**Ringing characteristics**	**9**
	6.5.1	*Impedance*	*9*
	6.5.2	*DC during Ring*	*9*
PARTICIPANTS			**11**

FIGURES

1 Ring Impedance test circuit 10
2 Test Circuit for DC flowing during ring 10

1 INTERPRETATIVE GUIDELINES

1.1 Categories of requirements

This Standard contains mandatory requirements as well as provisions that are recommendatory only. Mandatory requirements are designated by the words '**shall**' or '**shall not'**. All other provisions are voluntary.

1.2 Compliance statements

Compliance statements, in italics, suggest methodologies for demonstrating CE's compliance with the requirements.

1.3 Definitions, expressions and terms

If there is any conflict between the definitions used in this Standard and the definitions used in the *Telecommunications Act 1997*, the definitions in the Act take precedence.

1.4 Notes

Text denoted as 'Note' is for guidance in interpretation and is shown in smaller size type.

1.5 References

(a) Applicable editions (or versions) of other documents referred to in this Standard are specified in Section 3: REFERENCES.

(b) If a document refers to another document, the other document is a sub-referenced document.

(c) Where the edition (or version) of the sub-referenced document is uniquely identified in the reference document, then that edition (or version) applies.

(d) Where the edition (or version) of the sub-referenced document is not uniquely identified in the reference document, then the applicable edition (or version) is that which is current at the date the reference document is legislated under the applicable regulatory framework, or for a non- legislated document, the date upon which the document is published by the relevant standards organisation.

(e) A number in square brackets '[ ]' refers to a document listed in Section 3: REFERENCES.

1.6 Units and symbols

In this Standard the International System (SI) of units and symbols is used in accordance with Australian Standard AS ISO 1000 [1].

2 SCOPE

2.1 This Standard specifies the technical requirements for Customer Equipment (CE), or the parts of the CE that are designed or intended for connection to a DSL service that shares the metallic local loop with an analogue PSTN two-wire service.

2.2 This Standard does not apply to CE or the parts of CE designed or intended for connection only to an analogue PSTN two-wire service.

2.3 CE is not excluded from the scope of this Standard by reason only that it is capable of performing functions additional to those listed in this Standard.

Note 1: For the purposes of this scope ADSL modems and filters are examples of CE designed for connection to a DSL service operating over a shared metallic local loop with an analogue PSTN two-wire service.

Note 2: AS/ACIF S002 [3] specifies the technical requirements for connection to an analogue PSTN two-wire service.

3 REFERENCES

	Publication	Title
	Australian Standards	
[1]	AS ISO 1000-1998	The international System of Unit (SI) and its application.
[2]	AS/NZS 60950.1:2003	Information technology equipment - Safety - General requirements
	AS/ACIF Standards	
[3]	AS/ACIF S002:2005	Analogue interworking and non-interference requirements for Customer Equipment for connection to the Public Switched Telephone Network
	ACIF Guidelines	
[4]	ACIF G534:2003	Assessment of Emergency Service Access and Network

4 ABBREVIATIONS AND DEFINITIONS

For the purposes of this Standard, the following abbreviations and definitions apply:

4.1 Abbreviations

ACA	Australian Communications Authority
ACIF	Australian Communications Industry Forum
ACMA	Australian Communications and Media Authority
ADSL	Asymmetric Digital Subscriber Line
AS	Australian Standard
CE	Customer Equipment
DC	Direct Current
DSL	Digital Subscriber Line
NZS	New Zealand Standard
PE	Protective Earth
PSTN	Public Switched Telephone Network
SI	International System
VF	Voice Frequency

4.2 Definitions

4.2.1 Carrier

Refer to the *Telecommunications Act 1997*.

4.2.2 Customer Equipment

Refer to the *Telecommunications Act 1997*.

4.2.3 Facility

Refer to Section 374(2) of *the Telecommunications Act 1997*.

4.2.4 Metallic local loop

Metallic twisted pair communications wire in a carrier's network that provides connectivity between a customer's premises and equipment in a Telecommunications Network.

4.2.5 Public Switched Telephone Network (PSTN)

That part of the Telecommunications Network which enables any customer to establish a connection for voice frequency communication with any other customer either automatically or with operator assistance.

Note: The PSTN has a nominal transmission bandwidth of 3 kHz.

4.2.6 Ring-in/Loop-out PSTN line

A both-way call set-up line connection with the PSTN. Incoming signalling to CE is by the application of a ring signal at the PSTN

exchange. Outgoing signalling from CE is by the application of a DC loop at the CE.

4.2.7 Standard Telephone Service

Refer to Section 6 of the *Telecommunications (Consumer Protection and Service Standards) Act 1999*.

Note: ACIF G534 [4] provides guidance on the application of the standard telephone service definition.

4.2.8 Telecommunications Network

Refer to Section 374(1) of the *Telecommunications Act 1997*.

4.2.9 Voice Frequency (VF)

Those frequencies in the range of 300 Hz to 3.4 kHz.

5 REQUIREMENTS

5.1 General

5.1.1 Line polarity

CE operation **shall** be independent of line conductor polarity.

Compliance with Clause 5.1.1 should be checked by application of polarity reversals.

5.1.2 Transmitted voltages

Voltages transmitted to a Telecommunications Network from CE, in any line condition, are not to exceed the limits for Telecommunications Network Voltages (TNV), as specified in AS/NZS 60950.1 [2].

5.1.3 Insulation Resistance

CE **shall** provide an insulation resistance of not less than 10 MΩ between—

(a) the two line conductors;

(b) each line conductor and TRC terminal, if equipped; and

(c) each line conductor and PE terminal, if equipped

when tested with 250 V d.c. of each polarity, in series with a 600 kΩ resistance. Any protective devices internal to the CE **shall** remain connected for each test.

Compliance with Clause 5.1.3 should be checked by measuring the DC resistance between the line conductors and between each line conductor and the TRC terminal and the power supply protective earth termination separately, if provided. Any internal protective devices are to remain connected for each test.

5.1.4 Ringing Impedance

CE **shall** have a modulus of impedance greater than 40 kΩ at 25 Hz when tested in the configuration of Figure 1.

Compliance with Clause 5.1.4 can be verified by the procedure indicated in Clause 6.5.1.

5.1.5 DC during Ring

5.1.5.1 When a ring signal of 25 Hz sine wave at 95 V r.m.s. superimposed on 56 V d.c. (with a source impedance of 470 Ω) as shown in Figure 2 is applied to the line terminals of CE, the DC component of the current **shall not** exceed 600 μA.

5.1.5.2 When a ring signal of 25 Hz sine wave at 95 V r.m.s. superimposed on 56 V d.c. (with a source impedance of 470 Ω) as shown in Figure 2 is applied to the line terminals of CE, the DC component of the current should not exceed 200 μA.

Compliance with Clause 5.1.5 can be verified by the procedure indicated in Clause 6.5.2

6 TESTING

6.1 Verification of compliance with requirements

Compliance with all mandatory requirements in this AS/ACIF Standard is to be verified. This may be done by direct measurement, modelling and analysis, operation or inspection.

Methods for demonstrating compliance of CE with the requirements clauses specified in this Standard are described in Clauses 6.2 to 6.5.

Alternative methods of demonstrating compliance to those described may be used if the risk of passing non-compliant CE is not increased because of increased measurement uncertainty.

6.2 Standard test conditions

6.2.1 Unless this Standard provides otherwise, testing for compliance with this Standard should be conducted at the nominal supply voltage of the CE and within the following ranges of atmospheric conditions:

(a) An ambient temperature in the range of 15°C to 25°C inclusive.

(b) A relative humidity in the range of 45% to 75% inclusive.

(c) An air pressure in the range of 86 kPa to 106 kPa inclusive.

6.2.2 Where elements in a test configuration are variable, the test should be carried out over the indicated range for that element.

6.2.3 Unless indicated elsewhere within this Standard—

(a) the accuracy level of all measurements should be better than ± 2% for voltage and current, ± 0.25% for frequency and ± 0.5% for time; and

(b) the tolerance of the nominal 48 V d.c. test source should be ± 0.5 V.

6.2.4 Unless indicated elsewhere within this Standard for an individual test, all component values in the test configuration should have a tolerance of—

(a) ± 1% for resistance;

(b) ± 1% for capacitance; and

(c) –0%, +25% for inductors.

6.3 Levels

Unless otherwise specified, tests should be carried out with a send level of –10 dBV for VF signals.

6.4 Test frequencies

Test frequencies should be in the range of 300 Hz to 4 kHz unless otherwise specified in the relevant requirement clauses of this Standard. Sufficient measurements should be carried out around all nodal points of relevant masks, where applicable.

6.5 Ringing characteristics

6.5.1 Impedance

The impedance of DSL products that are interfaced to a PSTN subscriber line should be measured in the configuration of Figure 1 with the impedance calculated from the voltage dropped across the 1.2 kΩ resistor.

6.5.2 DC during Ring

The DC component of the current flowing during application of ring should be measured using the test configuration shown in Figure 2. The milliammeter used should be a moving-coil DC responding instrument.

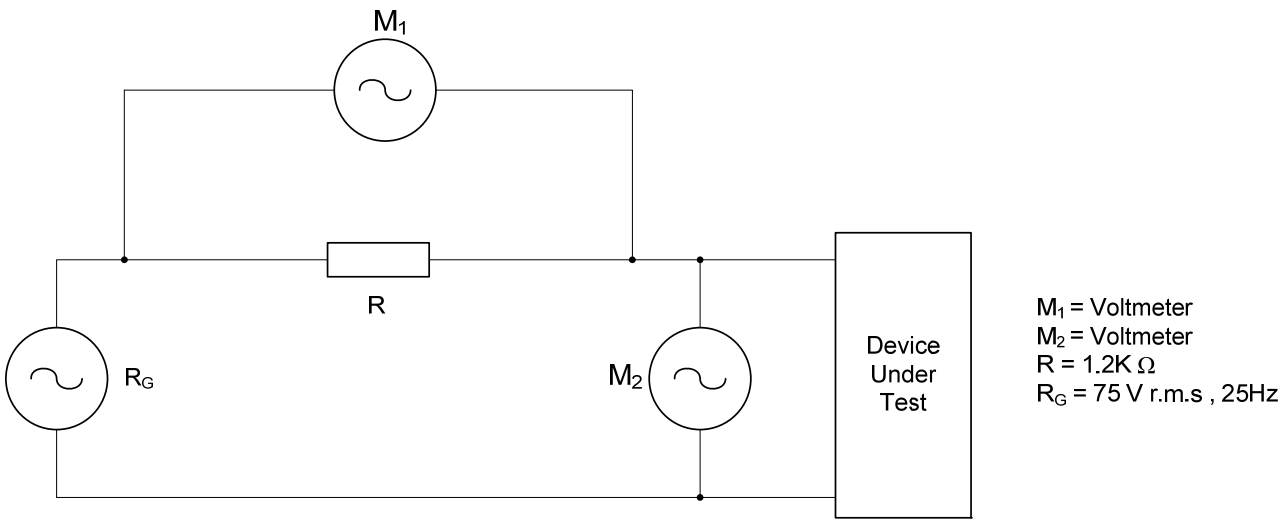

Figure 1
Ring Impedance test circuit

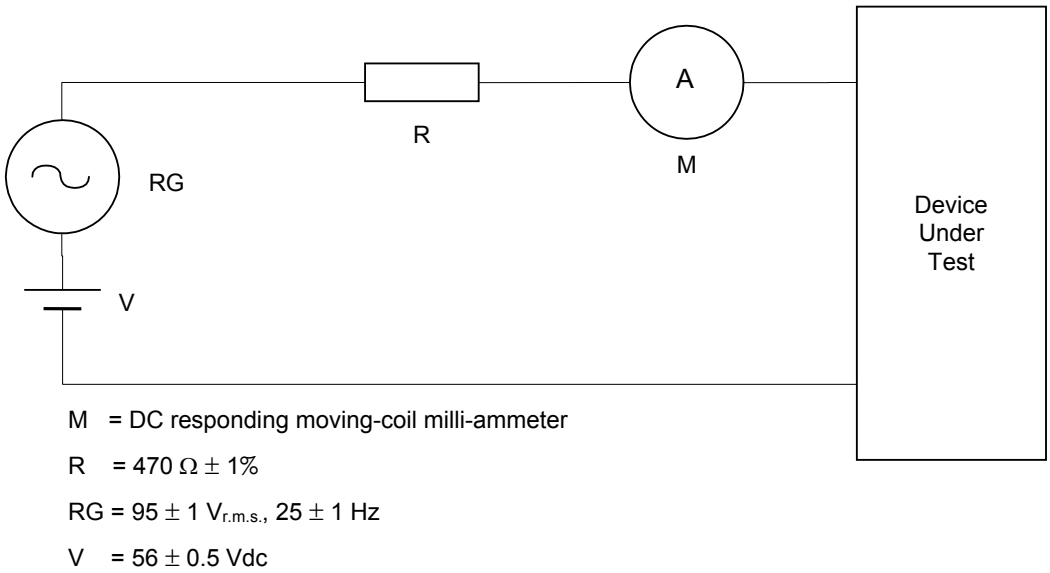

Figure 2
Test Circuit for DC flowing during ring

PARTICIPANTS

The Working Committee responsible for the revisions made to this Standard consisted of the following organisations:

Organisation	Membership
Advanced Circuit and Systems	Voting
Testing & Certification Australia	Voting
C10 Communications	Voting
Cisco Systems	Voting
Comtest Laboratories	Voting
Optus	Voting
Industry Expert	Voting
Telephone Equipment NSW	Voting
Telstra	Voting
Thomson Telecom Australia	Voting
Australian Communications and Media Authority	Non-voting
Communications Alliance	Non-voting

This Working Committee was chaired by Mike Johns of Communications Alliance Ltd who also provided project management support.

Communications Alliance was formed in 2006 to provide a unified voice for the Australian communications industry and to lead it into the next generation of converging networks, technologies and services.

In pursuing its goals, Communications Alliance offers a forum for the industry to make coherent and constructive contributions to policy development and debate.

Communications Alliance seeks to facilitate open, effective and ethical competition between service providers while ensuring efficient, safe operation of networks, the provision of innovative services and the enhancement of consumer outcomes.

It is committed to the achievement of the policy objective of the *Telecommunications Act 1997* - the greatest practicable use of industry self-regulation without imposing undue financial and administrative burdens on industry.

Published by:
COMMUNICATIONS
ALLIANCE LTD

Level 9
32 Walker Street
North Sydney
NSW 2060 Australia

Correspondence
PO Box 444
Milsons Point
NSW 1565

T 61 2 9959 9111
F 61 2 9954 6136
TTY 61 2 9923 1911
E info@commsalliance.com.au
www.commsalliance.com.au
ABN 56 078 026 507

Care should be taken to ensure the material used is from the current version of the Standard or Industry Code and that it is updated whenever the Standard or Code is amended or revised. The number and date of the Standard or Code should therefore be clearly identified. If in doubt please contact Communications Alliance

ISBN: 1 74000 385 3